LIGHTING FIXTURE SCHEDULE

MARK	QTY.	MANUFACTURER	MODEL	SIZE	MOUNTING	LENS TYPE	LUMENS/WATTS	CRI	CCT	VOLTAGE	NOTES/COMMENTS/DESCRIPTION
A	12	H. E. WILLIAMS	PT	2' X 2'	TROFFER	RA	2600 LUM	80	3500K	120/UNV	PT - 22 - L26/835 - RA - DIM - UNV SHALLOW PLENUM LED TROFFER USED AS PART OF ALTERNATE #2
C	5	H. E. WILLIAMS	1SF	2'-0"	UNDER-CABINET	AF12125	1200 LUM	80	3500K	120/UNV	1SF - 2 - L12/835 - AF12125 - WRS/120 - DRV - UNV SOLID FRONT UNDER CABINET LED LIGHT
EM	1	H. E. WILLIAMS	EMER/LED		WALL		---	-	---	120/D	EMER/LED - WHT - HL - D LED EMERGENCY LIGHT WITH TWO (2) HIGH LUMEN HEADS
XM	1	H. E. WILLIAMS	EXIT/EM/LED		WALL/CEILING		---	-	---	120/D	EXIT/EM/LED - R - WHT - D LED EXIT AND LED EMERGENCY LIGHT
									CCT = COLOR CORRELATED TEMPERATURE		

CIRCUIT SCHEDULE (FOR NEW WORK ONLY)

CIRCUIT ID	WIRE SIZE	GND WIRE SIZE	CONDUIT SIZE	CONDUIT TYPE
A	(3)-1/C-#1 AWG (1)-1/C-#2 NEUTRAL	(1)-1/C-#8 AWG	1 1/4"	EMT
C	(4)-1/C-#1 AWG	(1)-1/C-#8 AWG	2"	EMT

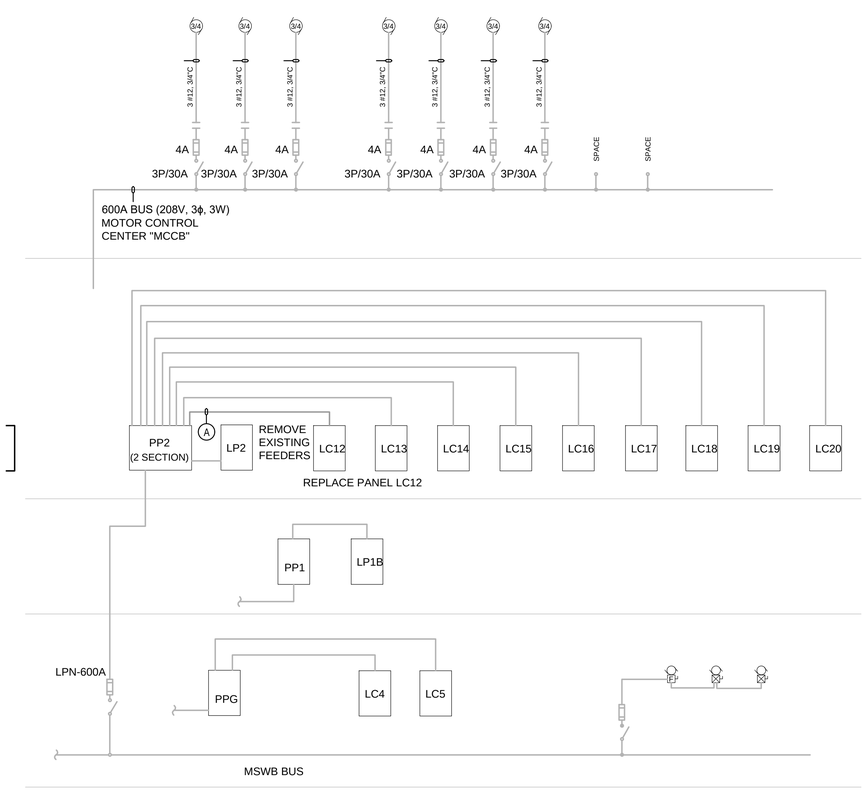

6 E501 PARTIAL RISER DIAGRAM
SCALE NTS

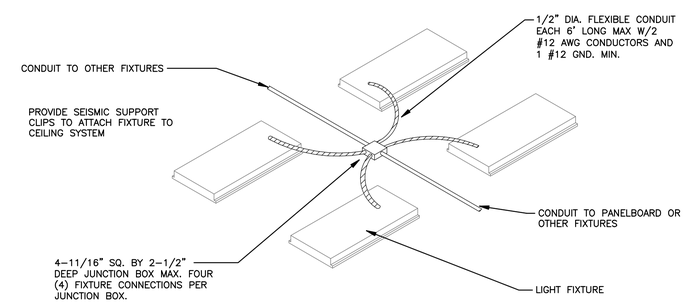

5 E501 PERMISSIBLE LIGHTING CIRCUIT INSTALLATION
SCALE NTS

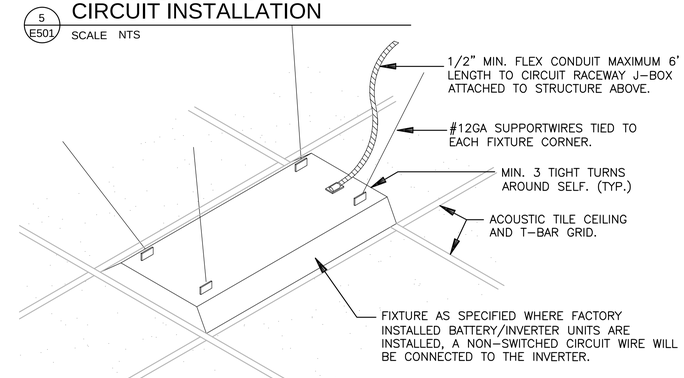

4 E501 LIGHT FIXTURE MOUNTING AND BRACING DETAIL
SCALE NTS

PANELBOARD SCHEDULE

PANELBOARD NO.: LC12 LOCATION: LAB 213

VOLTAGE: 208Y/120V/100A
BUS: 100A
MTG: FLUSH
TYPE: [X] X - LUG ONLY [ ] MAIN BKR. (AMPS)
AIC (SYM): 22K

NAME PLATE:
CAUTION: THIS EQUIPMENT HAS A MINIMUM SHORT CIRCUIT REQUIREMENT OF 22,000 AIC. ALL DEVICES INSTALLED MUST HAVE A RATING EQUAL TO OR HIGHER THAN THE DESIGN REQUIREMENT.

A B C N — SEE "TYPE"

SERVICE	BREAKER POLE	BREAKER AMP			BREAKER AMP	BREAKER POLE	SERVICE
LIGHTS CORRIDOR	1	20	1	2	20	1	LIGHTS LAB 213
RCPT W WALL RACEWAY 213	1	20	3	4	20	1	UNDER CABINET LTS LAB 213
RCPT W WALL RACEWAY 213	1	20	5	6	30	2	NEMA 6-30 W WALL RACEWAY
RCPT S WALL RACEWAY 213	1	20	7	8			
RCPT S WALL RACEWAY 213	1	20	9	10	30	2	NEMA 6-30 W WALL RACEWAY
FUME HOOD RECEPTACLE	1	20	11	12			
FUME HOOD RECEPTACLE	1	20	13	14	30	2	NEMA 6-30 W WALL RACEWAY
FUME HOOD LIGHT	1	20	15	16			
BLOWER COIL UNIT (BCU)	3	20	17	18	30	2	NEMA 6-30 W WALL RACEWAY
			19	20			
			21	22	20	1	S SIDE S BENCH LAB 213
S SIDE C BENCH LAB 213	1	20	23	24	20	1	S SIDE S BENCH LAB 213
S SIDE C BENCH LAB 213	1	20	25	26	20	1	N SIDE S BENCH LAB 213
N SIDE C BENCH LAB 213	1	20	27	28	20	1	N SIDE S BENCH LAB 213
N SIDE C BENCH LAB 213	1	20	29	30	20	1	S SIDE N BENCH LAB 213
EAST WALL LAB 213	1	20	31	32	20	1	S SIDE N BENCH LAB 213
EAST WALL LAB 213	1	20	33	34	20	1	N SIDE N BENCH LAB 213
			35	36	20	1	N SIDE N BENCH LAB 213
			37	38			
			39	40			
			41	42			

ALTERNATE #4 SHOWN,
BASE BID WOULD BE FAN COIL UNIT (FCU).

3 E501 RENOVATION PANELBOARD SCHEDULE
SCALE NTS

PANELBOARD SCHEDULE

PANELBOARD NO.: LC12 LOCATION: LAB 213

VOLTAGE: 208Y/120V
BUS: 100A
MTG: FLUSH
TYPE: [X] X - LUG ONLY [ ] MAIN BKR. (AMPS)
AIC (SYM): 10K AIC, WESTINGHOUSE

NAME PLATE:
CAUTION: PPE RATING MUST EXCEED CALCULATED CAL/CM^2 FLASH HAZARD AT 18". LIMITED APPROACH OF 42". PROTECTIVE DEVICE: 52 - PP2 (LC12). BOLTED FAULT CURRENT: 4.158kA.

A B C N — SEE "TYPE"

SERVICE	BREAKER POLE	BREAKER AMP			BREAKER AMP	BREAKER POLE	SERVICE
LIGHTS ROOM 213	1	20	1	2	20	1	RECEPTACLE
LIGHTS ROOM 213	1	20	3	4	20	1	RECEPTACLE
LIGHTS CORRIDOR	1	20	5	6	30	2	208V RECEPTACLE
FAN COIL UNIT	3	20	7	8			
			9	10	30	2	208V RECEPTACLE
			11	12			
FUME HOOD RECEPTACLE	1	20	13	14	30	2	208V RECEPTACLE
FUME HOOD RECEPTACLE	1	20	15	16			
FUME HOOD LIGHT	1	20	17	18	20	1	RECEPTACLE
RECEPTACLE	1	20	19	20	20	1	RECEPTACLE
RECEPTACLE	1	20	21	22	30	2	208V RECEPTACLE
RECEPTACLE	1	20	23	24			
RECEPTACLE	1	20	25	26	30	2	SPARE
RECEPTACLE	1	20	27	28			
RCPT WINDOW LAB 213	1	20	29	30	20	1	RCPT WINDOW LAB 213

2 E501 DEMOLITION PANELBOARD SCHEDULE
SCALE NTS

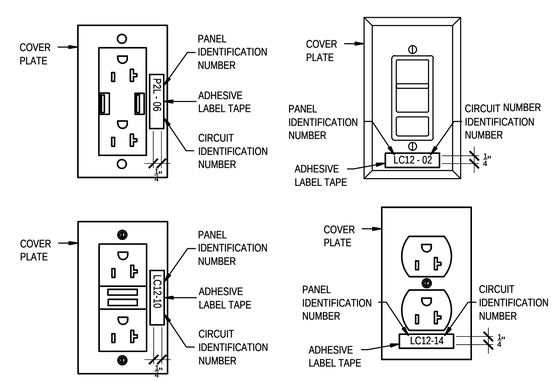

1 E501 COVER PLATE LABEL (FOR EXAMPLE ONLY)
SCALE NTS

STATE OF MISSOURI
JAMES L. DOVE
NUMBER PE-2002016644
PROFESSIONAL ENGINEER

ENGINEER -
JAMES L. DOVE
MO.# E-2002016644

James L. Dove P.E
Digitally signed by James L. Dove P.E
Date: 2021.09.07 14:32:55 -05'00'

The Professional Engineers seal and signature affixed to this sheet applies only to the material and information shown on this sheet. All drawings, documents, or other instruments prepared by this engineer, are the property of the engineer and shall not be considered prepared by this engineer, and he assumes no responsibility for any use of all documents not exhibiting this seal.

This Document is intended to be signed digitally in accordance with the attached to this file. This media should not be considered a certified document.

09/13/21	ISSUED FOR CONSTRUCTION	
DRAWN BY: JDR		CHECKED BY: JLD

CAMPUS FACILITIES
Planning, Design, & Construction
Design Services
UNIVERSITY OF MISSOURI

SCHWEITZER HALL
COLUMBIA, BOONE COUNTY, MISSOURI 65211
RENOVATE LAB 213
ELECTRICAL DETAILS AND SCHEDULES

PROJECT NUMBER
CP211261

SHEET
E501