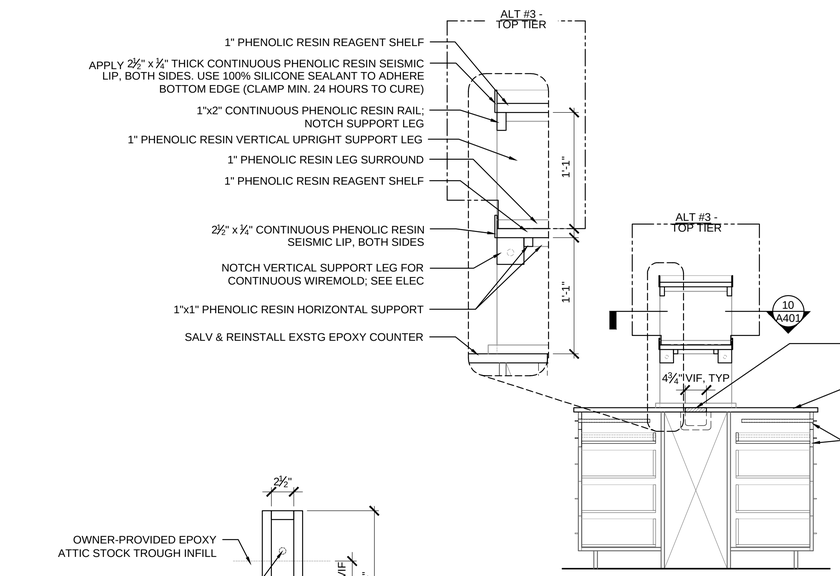

9 A401 SECTION DETAIL
SCALE 3/4" = 1'-0"

FINISH MATERIALS

CALL OUT	DESCRIPTION	MANUFACTURER	COLOR/ PRODUCT	LOCATION	REMARKS
ACT-1	ACOUSTIC CEILING TILE	ARMSTRONG COMMERCIAL	ULTIMA LAY-IN; WHITE 24x24 #1910; PRELUDE 15/16" GRID WHITE	REF TO CLG PLAN FOR EXTENTS	ALT #1
C-1	CORK	MANTON	0'-¼"D X 4'-0"W X 12'-0"L ROLL (400012)	DIVIDER PANELS	CUT TO FIT; MATCH EXSTG DIMS
FL-1	SHEET VINYL	TEKNOFLOOR	MOONSCAPES- 8653 PEARL GREY	THROUGHOUT	ALT #2
PT-1	WALL & CEILING PAINT	BENJAMIN MOORE	WIND'S BREATH 981, EGGSHELL	ALL WALLS WITHIN 213 & EXPOSED CLG AT PERIMETER OF ACT GRID	
PT-2	METAL CASEWORK PAINT	SHERWIN WILLIAMS	ALKYD ENAMEL, SEMI GLOSS; WIND'S BREATH 981	EXSTG FUME HOOD & SINK BASE CAB	
PT-3	DOOR FRAME PAINT	SHERWIN WILLIAMS	ALKYD ENAMEL, SEMI GLOSS; FRENCH ROAST SW6069	DOOR TO CORRIDOR & DOOR TO LAB 211, BOTH SIDES	
SS-1	SOLID SURFACE	TRESPA	PHENOLIC RESIN - SLATE GRAY T70.0.0	BASE BID - ONE TIER OF REAGENT SHELVES & CHASES. ALT #3 - TOP TIER OF REAGENT SHELVES. REF TO ELEVS.	
ST-1	CAB STAIN	TBD	TBD, MATCH EXSTG	ALL WOODEN DRAWERS AND DOORS ETR & NEW U.N.O.; ALL EXPOSED FACES OF WOOD CABINETS AND FILLER PANELS	
VB-1	VINYL WALL BASE	TARKETT	BASEWORKS THERMOSET 4" - COLOR TO BE SELECTED BY ARCHITECT FROM MANUFACTURER'S STANDARD LINE; BASE BID: MATCH EXSTG; ALT 1: MATCH DOOR FRAME PT	BASE BID - PROVIDE NEW ONLY AT NEW KNEE SPACES; ALT #2 - PROVIDE NEW THROUGHOUT SPACE INCLUDING ALL WALLS, BASE CABINETS AND KNEE SPACES	
VCT-1	VINYL COMPOSITE FLOOR TILE	TARKETT	AZROCK OR SIMILAR 12X12 COLOR TO MATCH EXISTING; PROVIDE SAMPLE FROM MANUFACTURER'S STANDARD LINE	ALL EXPOSED CONC INCL BUT NOT LIMITED TO BASE CAB REMOVAL LOCS	BASE BID ONLY

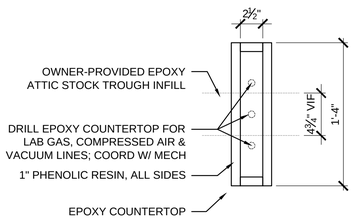

12 A101 PLAN DETAIL - TYPICAL CHASE
SCALE 1-1/2" = 1'-0"

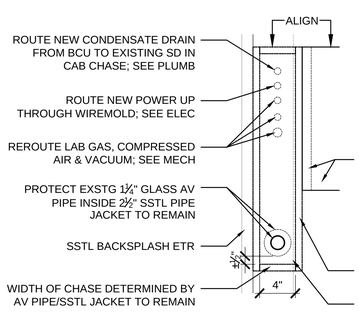

11 A101 PLAN DETAIL - BENCH C - ATYPICAL CHASE
SCALE 1-1/2" = 1'-0"

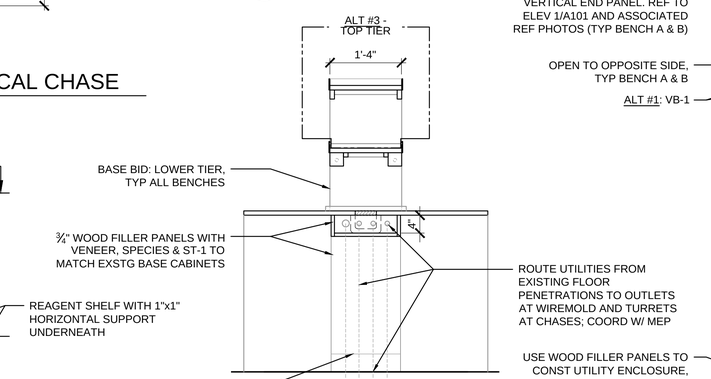

8 A401 SECTION DETAIL AT NEW UTILITY CHASE
SCALE 3/4" = 1'-0"

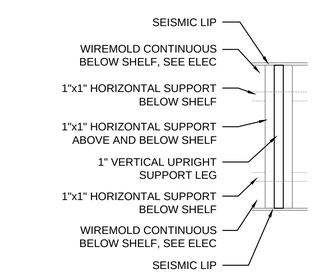

10 A401 PLAN DETAIL - TYP SUPPORT LEG
SCALE 1-1/2" = 1'-0"

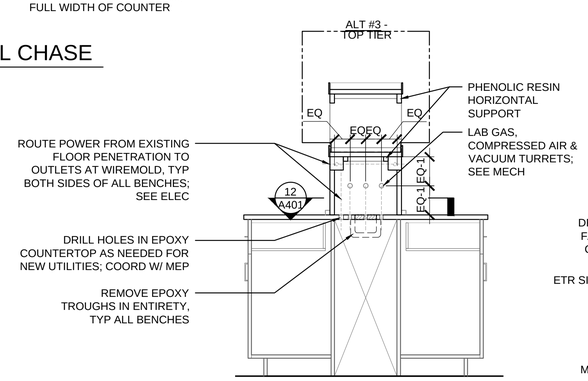

7 A401 SECTION DETAIL AT NEW UTILITY CHASE
SCALE 3/4" = 1'-0"

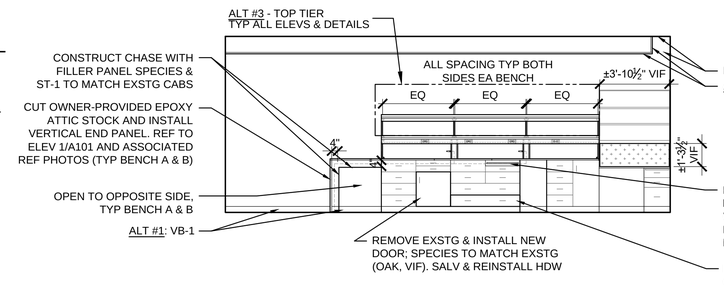

6 A101 INT ELEVATION - BENCH A SOUTH
SCALE 1/4" = 1'-0"

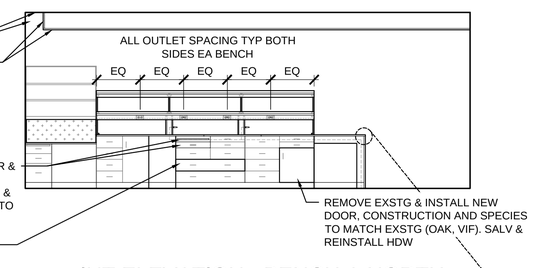

3 A101 INT ELEVATION - BENCH A NORTH
SCALE 1/4" = 1'-0"

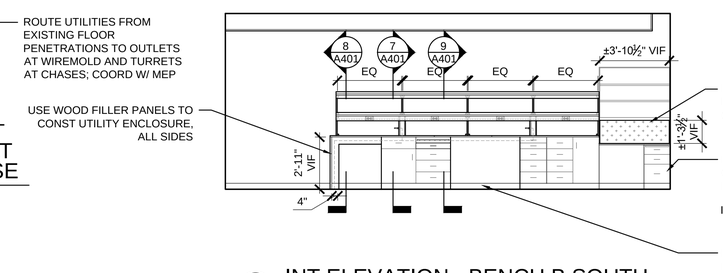

5 A101 INT ELEVATION - BENCH B SOUTH
SCALE 1/4" = 1'-0"

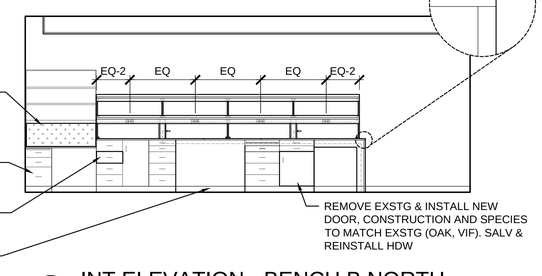

2 A101 INT ELEVATION - BENCH B NORTH
SCALE 1/4" = 1'-0"

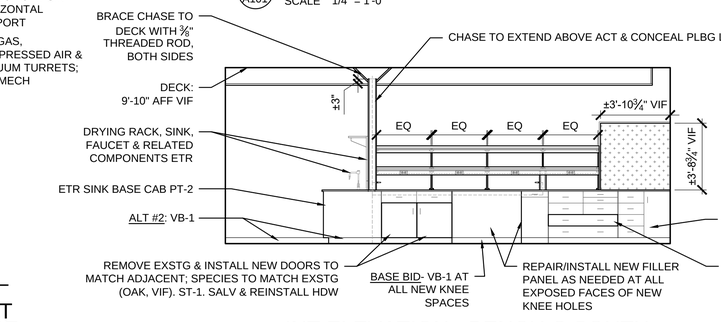

4 A101 INT ELEVATION - BENCH C SOUTH
SCALE 1/4" = 1'-0"

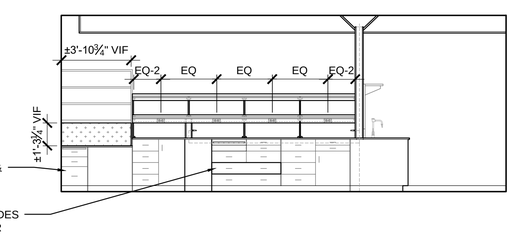

1 A101 INT ELEVATION - BENCH C NORTH
SCALE 1/4" = 1'-0"

ELEV NOTES ARE TYP & SHALL BE INFERRED & APPLIED TO ALL ELEVS FOR SIM CONDS & CONST COMPONENTS/CONFIGURATIONS, U.N.O.

STATE OF MISSOURI
Emily M. Johnson
A-2020011136
ARCHITECT

ARCHITECT - EMILY M. JOHNSON
MO# A-2020011136

Emily M. Johnson
Digitally signed by Emily M. Johnson
Date: 2021.09.07 22:34:10 -05'00'

The Professional Architects seal and signature applies only to the material and information shown on this sheet. All drawings, instruments, or other documents prepared by this architect, and this architect expressly disclaims any and all liability for any other documents or documents not exhibiting this seal.

This Document is intended to be signed digitally. If no digital signature is attached to this document, then the original ink version is considered a certified document.

09/13/21	ISSUED FOR CONSTRUCTION	
		DRAWN BY: EH
		CHECKED BY: EJ

CAMPUS FACILITIES
Planning, Design, & Construction
Design Services
UNIVERSITY OF MISSOURI

SCHWEITZER HALL
COLUMBIA, BOONE COUNTY, MISSOURI 65211
RENOVATE LAB 213
INTERIOR ELEVATIONS, DETAILS & SCHEDULES

PROJECT NUMBER
CP211261

SHEET
A401