BLOWER COIL UNIT SCHEDULE

MARK	MFR. & MODEL NO. (OR EQUAL)	AHU TYPE	FAN				MIN OA (CFM)
			TOTAL CFM	TSP/ESP (in. wc)	RPM	HP/VOLTS /PHASE	
BCU-1	TRANE: BCHD072	DRAW THROUGH	1920	1.467/0.75	1000	1/208/3	0

MARK	COOLING COIL											
	COIL TYPE	COIL CFM	MAX. FACE VEL. (fpm)	APD (in. wc)	TOTAL MBH	SENSIBLE MBH	EAT (°F) DB/WB	LAT (°F) DB/WB	EWT (°F)	LWT (°F)	WATER ΔP (ft.)	FLOW (gpm)
BCU-1	CHILLED WATER	1920	395	.483	47.5	44.25	75/62	53/53	46	60	2.32	6.75

MARK	REHEAT COIL										
	COIL TYPE	COIL CFM	MAX. FACE VEL. (fpm)	APD (in. wc)	TOTAL MBH	EAT (°F) DB	LAT (°F) DB	EWT (°F)	LWT (°F)	WATER ΔP (ft.)	FLOW (gpm)
BCU-1	HEATING WATER	1920	395	.091	70.94	55	90	160	100	.13	2.37

MARK	FILTER LOCATION	FILTER TYPE	MAX. FACE VEL. (fpm)	DEPTH (in.)	ΔP (in. water) CLEAN/DIRTY	REMARKS
BCU-1	PRE - FILTER	PLEATED MERV 13	338	2	.1 / .6	NEW TRANE BCHD BLOWER COIL UNIT, AIR TERMINAL DEVICE.

NOTES:
1. BCU MUST INCLUDE DIRECT DRIVE, VARIABLE SPEED FANS.
2. PROVIDE EC FAN MOTORS.
3. 6 ROW, HIGH CAPACITY COOLING COIL.
4. 2 ROW HEATING COIL

PLUMBING EQUIPMENT SCHEDULE

MARK	DESCRIPTION
GT-1	GAS TURRET - LAB GAS; CHICAGO FAUCETS, MODEL LGB1-11C-55 OR EQUAL, SINGLE SERVICE, HORIZONTAL, WALL MOUNT W/ WALL FLANGE AND SHANK, STRAIGHT PATTERN BALL VALVE, STRAIGHT SERRATED NOZZLE, SOLID BRASS CONSTRUCTION, BLUE WITH WHITE LETTERS INDEX BUTTON.
GT-2	GAS TURRET - COMPRESSED AIR; CHICAGO FAUCETS, MODEL LGB1-11A-55 OR EQUAL, SINGLE SERVICE, HORIZONTAL, WALL MOUNT W/ FLANGE AND SHANK, STRAIGHT PATTERN BALL VALVE, STRAIGHT SERRATED NOZZLE, SOLID BRASS CONSTRUCTION, ORANGE WITH BLACK LETTERS INDEX BUTTON.
GT-3	GAS TURRET - VACUUM; CHICAGO FAUCETS, MODEL LGB1-11B-55 OR EQUAL, SINGLE SERVICE, HORIZONTAL, WALL MOUNT W/ FLANGE AND SHANK, STRAIGHT PATTERN BALL VALVE, STRAIGHT SERRATED NOZZLE, SOLID BRASS CONSTRUCTION, YELLOW WITH BLACK LETTERS INDEX BUTTON.

LOCAL EXHAUST ARM SCHEDULE

MARK	DESCRIPTION
LEA-1	LOCAL EXHAUST ARM: MOVEX, MODEL MET 2000-75, 3"Ø, 90 CFM, 65" ARM LENGTH, POWDER COATED ALUMINUM, POLYPROPYLENE JOINTS. MOUNTING BRACKET: MOVEX, MODEL MTI 1000 + MTI CT, 40" LONG, WITH CEILING ESCUTCHEON PLATE. DOME HOOD: MOVEX, MODEL MEM 250-75, 10" DOME, 3" OUTLET.

CONTROL VALVE SCHEDULE

MARK	MFR. & MODEL NO. (OR EQUAL)	SERVICE	DESIGN FLOW (gpm/pph)	MAX FLOW (gpm/pph)	Δ P (psig)	CV MIN.	SIZE (in. Ø)	CLASS (#)	VALVE POSITION	OPERATOR TYPE	REMARKS
CV-1	BELIMO: Z2075QPT-G +CQB24-SR-LR	CHILLED WATER	6.75	9.0	< 5	--	3/4	150	NC / FC	0-10 VDC	PRESSURE INDEPENDENT ZONE CONTROL VALVE
CV-2	BELIMO: Z2050QPT-F +CQKB24-SR-L	HEATING WATER	2.37	4.3	< 5	--	1/2	150	NO / FAIL IN PLACE	0-10 VDC	PRESSURE INDEPENDENT ZONE CONTROL VALVE

DIFFUSER SCHEDULE

MARK	MFR. & MODEL NO. (OR EQUAL)	INLET SIZE (in.)	NOMINAL SIZE (in.)	MODULE SIZE (in.)	FINISH	PATTERN	NC	REMARKS
S-1	TITUS TMS	10	24 X 24	24 X 24	WHITE	360°	< 25	3 CONE, STEEL CONSTRUCTION, CEILING LAY-IN T-BAR MOUNTING
R-1	TITUS 50F	N/A	24 X 24	24 X 24	WHITE	EGG CRATE	< 17	CEILING LAY-IN T-BAR MOUNTING, ALUMINUM CONSTRUCTION, EGGCRATE PATTERN 1/2"x1/2"x1/2" STANDARD CORE.

SYMBOLS	
———	EXISTING
- - - -	DEMOLITION
———	NEW CONSTRUCTION
	DISCONNECT / CONNECTION POINT (LIMITS OF CONSTRUCTION)
	PIPE ELBOW DOWN
	PIPE ELBOW UP
	PIPE TEE DOWN
	PIPE TEE UP
	PIPE REDUCER (CONCENTRIC)
	PIPE REDUCER (ECCENTRIC)
	PIPE CAP
	GAS TURRET
	PIPE STRAINER
	CHECK VALVE
	GATE VALVE
	BALL VALVE
	AUTOFLOW VALVE
	TWO-WAY CONTROL VALVE
	VENTURI TYPE VAV
	SUPPLY DUCT (POSITIVE PRESSURE)
	RETURN OR EXHAUST DUCT (NEG. PRESS.)
	FLEX CONNECTION (SEE SPECS)
	FLEX DUCTWORK (SEE SPECS)
	DAMPER - VOLUME
	DIFFUSER - SUPPLY, RECT.
	DIFFUSER - SUPPLY, LINEAR
	DIFFUSER - SUPPLY, SIDEWALL
	GRILLE - RETURN OR EXHAUST
	GRILLE - SIDEWALL RETURN OR EXHAUST
T	THERMOSTAT

ABBREVIATIONS	
AW	ACID WASTE
AV	ACID VENT
BCU	BLOWER COIL UNIT
CA	COMPRESSED AIR
CFM	CUBIC FEET PER MINUTE
CWS	CHILLED WATER SUPPLY
CWR	CHILLED WATER RETURN
D	DRAIN
DCW	DOMESTIC COLD WATER
DHW	DOMESTIC HOT WATER
EA	EXHAUST AIR
EF	EXHAUST FAN
FCV	FLOW CONTROL VALVE
FD	FLOOR DRAIN
FH	FUME HOOD
LG	LAB GAS
SA	SUPPLY AIR
RA	RETURN AIR
OA	OUTSIDE AIR
VD	VOLUME DAMPER
VAC	VACUUM
HWS	HOT WATER SUPPLY
HWR	HOT WATER RETURN
VAV	VARIABLE AIR VOLUME

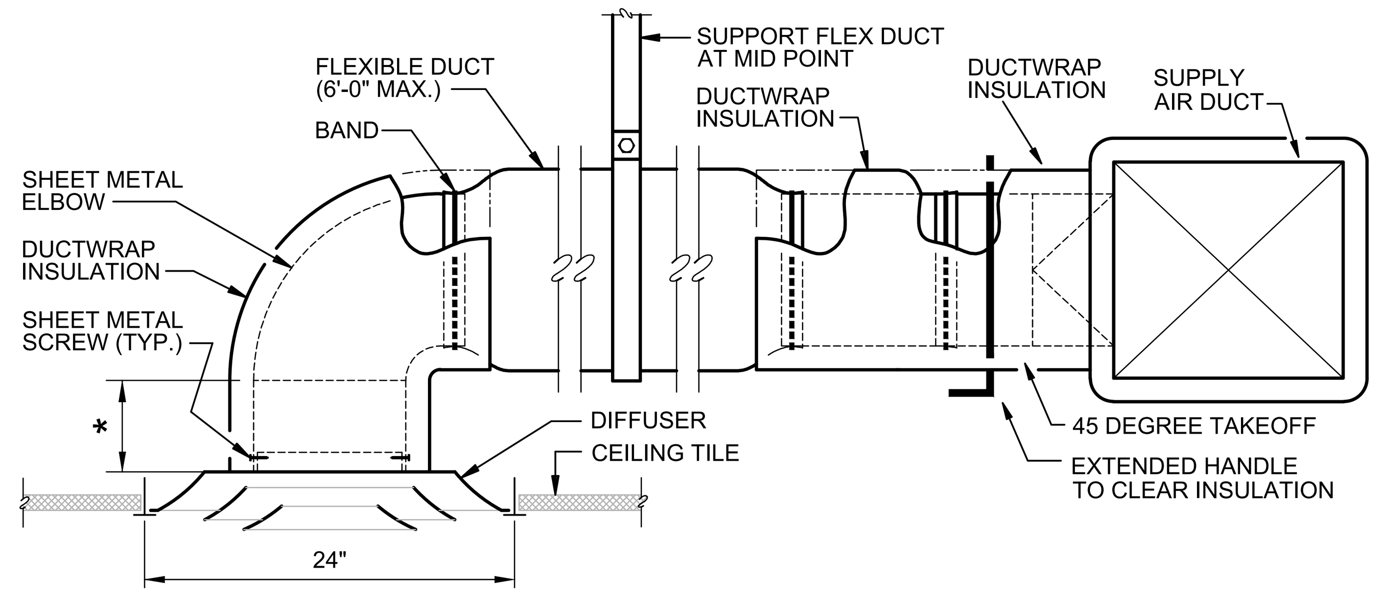

*LENGTH AS NECESSARY TO RAISE CENTER LINE OF ELBOW TO SAME ELEVATION AS CENTER LINE OF BRANCH DUCT.

NOTE: FLEXIBLE DUCT MAY BE EXTENDED OVER RIGID DUCT AND SECURED WITH BAND INSTEAD OF DUCT WRAP. EXTEND HANDLE OF VOLUME DAMPERS THROUGH INSULATION.

4 M601 DIFFUSER CONNECTION
SCALE: NONE

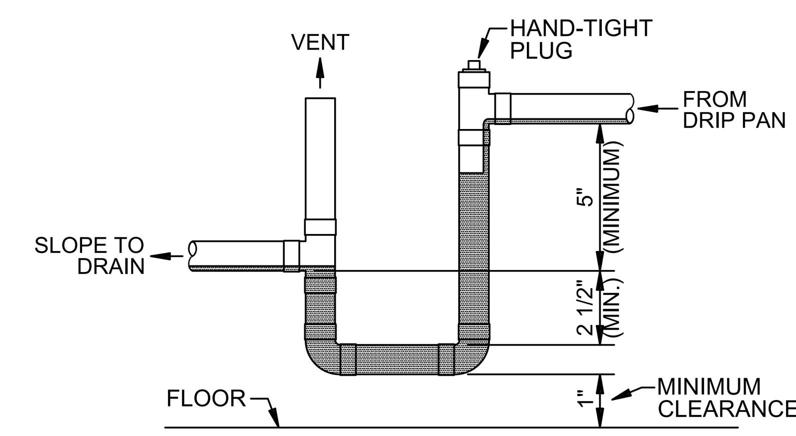

5 M601 COIL CONDENSATE TRAP (DRAW THROUGH UNIT)
SCALE: NONE GOOD FOR UP TO 4" w.g.

NOTE: ALL FITTINGS ON CONDENSATE DRAIN SHALL BE DWV FITTINGS.

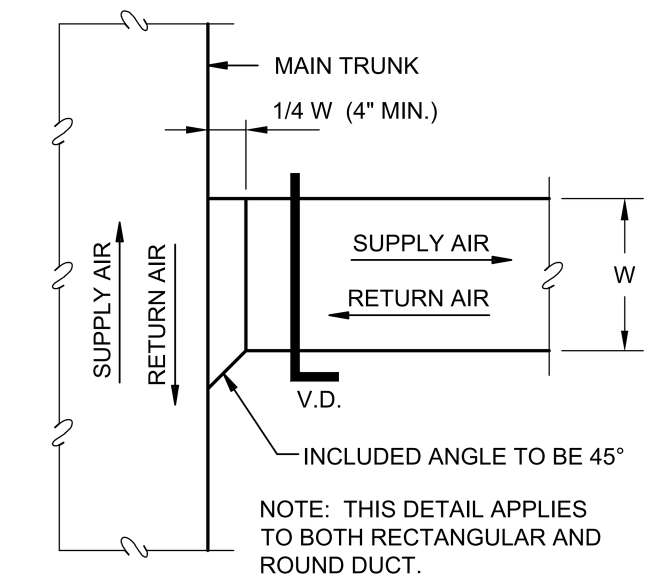

NOTE: THIS DETAIL APPLIES TO BOTH RECTANGULAR AND ROUND DUCT.

3 M601 BRANCH / RUNOUT CONNECTION
SCALE: NONE

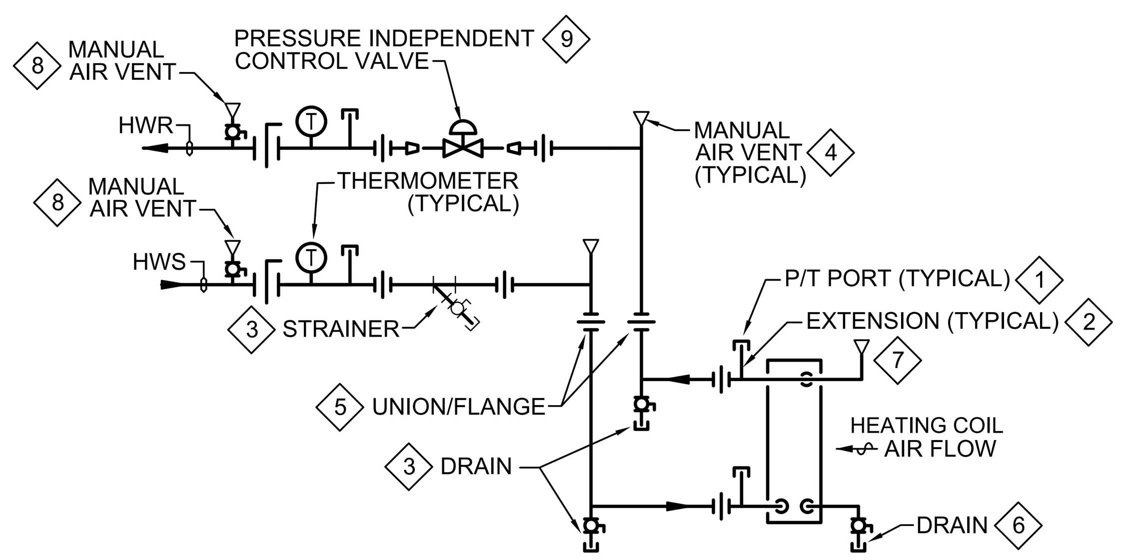

2 M601 AHU HOT WATER HEATING COIL PIPING
SCALE: NONE

1. FOR P/T PORT, USE PRESSURE TAP PROVIDED BY MANUFACTURER AT COIL IF AVAILABLE.
2. INSTALL EXTENSION AT PRESSURE TAP SO P/T PORT IS AT LEVEL OF INSULATION.
3. 3/4 INCH THREADED HOSE CONNECTION AND CAP. THESE DRAINS ARE NOT REQUIRED IF A COIL DRAIN IS INSTALLED THAT IS LOWER THAN THE EXTERNAL PIPE TO THE COIL.
4. PROVIDE MANUAL AIR VENTS AND SHUT-OFF/ISOLATION VALVES AT ANY HIGH POINT IN SUPPLY AND RETURN BETWEEN COIL AND SHUT-OFF/ISOLATION VALVE.
5. LOCATE SHUT-OFF VALVES, UNIONS AND FLANGES TO ALLOW CLEAR SPACE FOR REMOVAL OF COIL.
6. INSTALL DRAIN, SHUT-OFF VALVE, THREADED PIPE AND CAP. PIPE DRAIN TO OUTSIDE OF CABINET AND SEAL PENETRATION. THE DRAIN IS ONLY REQUIRED IF BOTTOM OF COIL IS LOWER THAN EXTERNAL PIPE CONNECTION TO THE COIL HEADER.
7. INSTALL MANUAL AIR VENT, SHUT-OFF VALVE, THREADED PIPE AND CAP. PIPE VENT TO OUTSIDE OF CABINET AND SEAL PENETRATION. THIS VENT IS ONLY REQUIRED IF THE TOP OF THE COIL IS HIGHER THAN THE EXTERNAL PIPE CONNECTION TO THE COIL HEADER.
8. PROVIDE MANUAL AIR VENTS AT ANY HIGH POINTS IN SUPPLY AND RETURN BETWEEN COIL SHUT OFF VALVE AND MAIN. 3/4 INCH THREADED HOSE CONNECTION AND CAP.
9. PROVIDE WITH FLOW RATING TO MATCH THE COIL SUBMITTAL FLOWRATE, OR THE NEXT AVAILABLE FLOWRATE GREATER THAN THE COIL SUBMITTAL FLOWRATE.

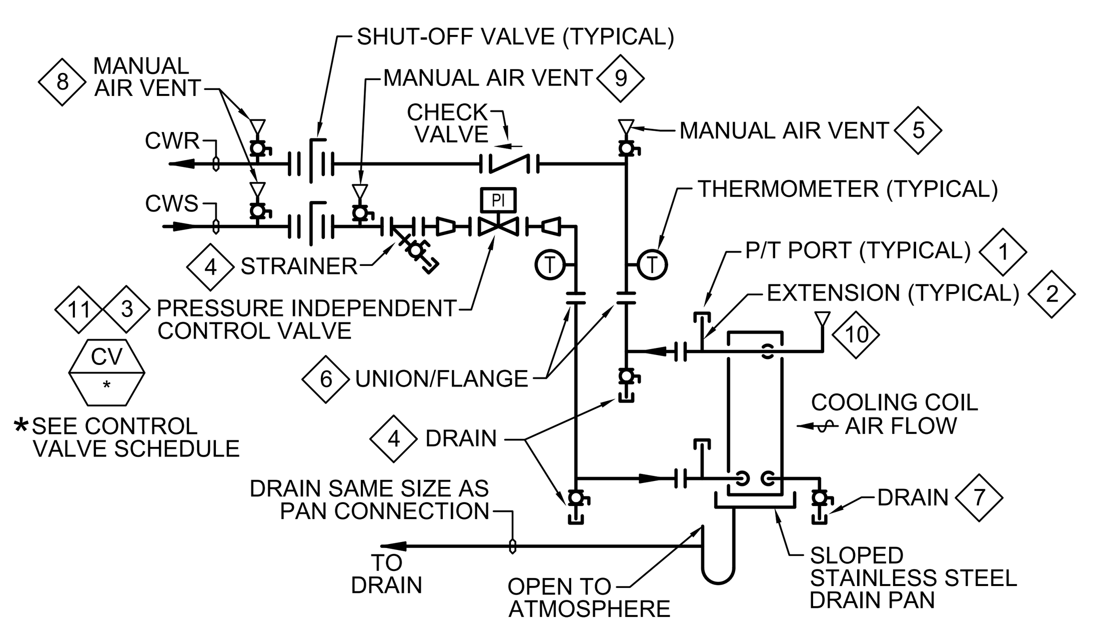

1 M601 AHU CHILLED WATER COIL PIPING
SCALE: NONE

1. FOR P/T PORT, USE PRESSURE TAP PROVIDED BY MANUFACTURER AT COIL IF AVAILABLE.
2. INSTALL EXTENSION AT PRESSURE TAP SO P/T PORT IS AT LEVEL OF INSULATION.
3. INSTALL P/T PORT UPSTREAM AND DOWNSTREAM OF CONTROL VALVE IF PORTS NOT ON VALVE.
4. 3/4 INCH THREADED HOSE CONNECTION AND CAP. THESE DRAINS ARE NOT REQUIRED IF A COIL DRAIN IS INSTALLED THAT IS LOWER THAN THE EXTERNAL PIPE TO THE COIL.
5. PROVIDE A MANUAL AIR VENT AT THE HIGH POINT BETWEEN THE COIL AND CHECK VALVE ON THE RETURN PIPING. 3/4 INCH THREADED HOSE CONNECTION AND CAP.
6. LOCATE SHUT-OFF VALVES, UNIONS AND FLANGES TO ALLOW CLEAR SPACE FOR REMOVAL OF COIL.
7. INSTALL DRAIN, SHUT-OFF VALVE, THREADED PIPE AND CAP. PIPE DRAIN TO OUTSIDE OF CABINET AND SEAL PENETRATION. THIS DRAIN REQUIRED ONLY IF BOTTOM OF COIL IS LOWER THAN EXTERNAL PIPE CONNECTION TO COIL HEADER.
8. PROVIDE MANUAL AIR VENTS AT ANY HIGH POINTS IN SUPPLY AND RETURN BETWEEN COIL SHUT OFF VALVE AND MAIN. 3/4 INCH THREADED HOSE CONNECTION AND CAP.
9. PROVIDE A MANUAL AIR VENT AT THE HIGH POINT BETWEEN THE SHUT OFF VALVE AND STRAINER ON THE SUPPLY PIPING. 3/4 INCH THREADED HOSE CONNECTION AND CAP.
10. INSTALL MANUAL AIR VENT, SHUT-OFF VALVE, THREADED PIPE AND CAP. PIPE TO OUTSIDE OF CABINET AND SEAL PENETRATION. THIS VENT ONLY REQUIRED IF THE TOP OF THE COIL IS HIGHER THAN THE EXTERNAL PIPE CONNECTION TO THE COIL HEADER.
11. PROVIDE WITH FLOW RATING TO MATCH THE COIL SUBMITTAL FLOWRATE, OR THE NEXT AVAILABLE FLOWRATE GREATER THAN THE COIL SUBMITTAL FLOWRATE.

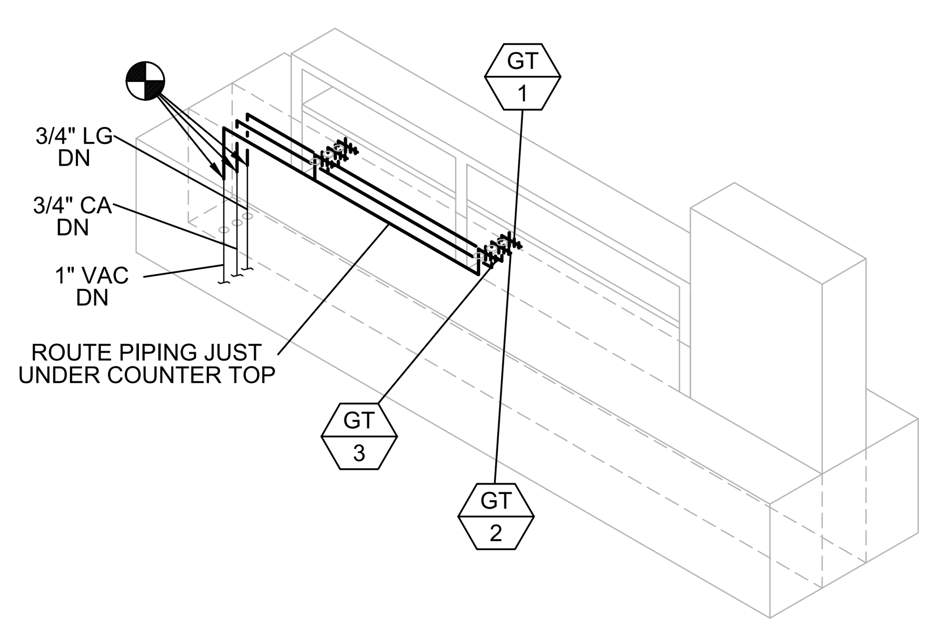

7 M601 TYPICAL BENCH GAS PIPING
SCALE: NONE

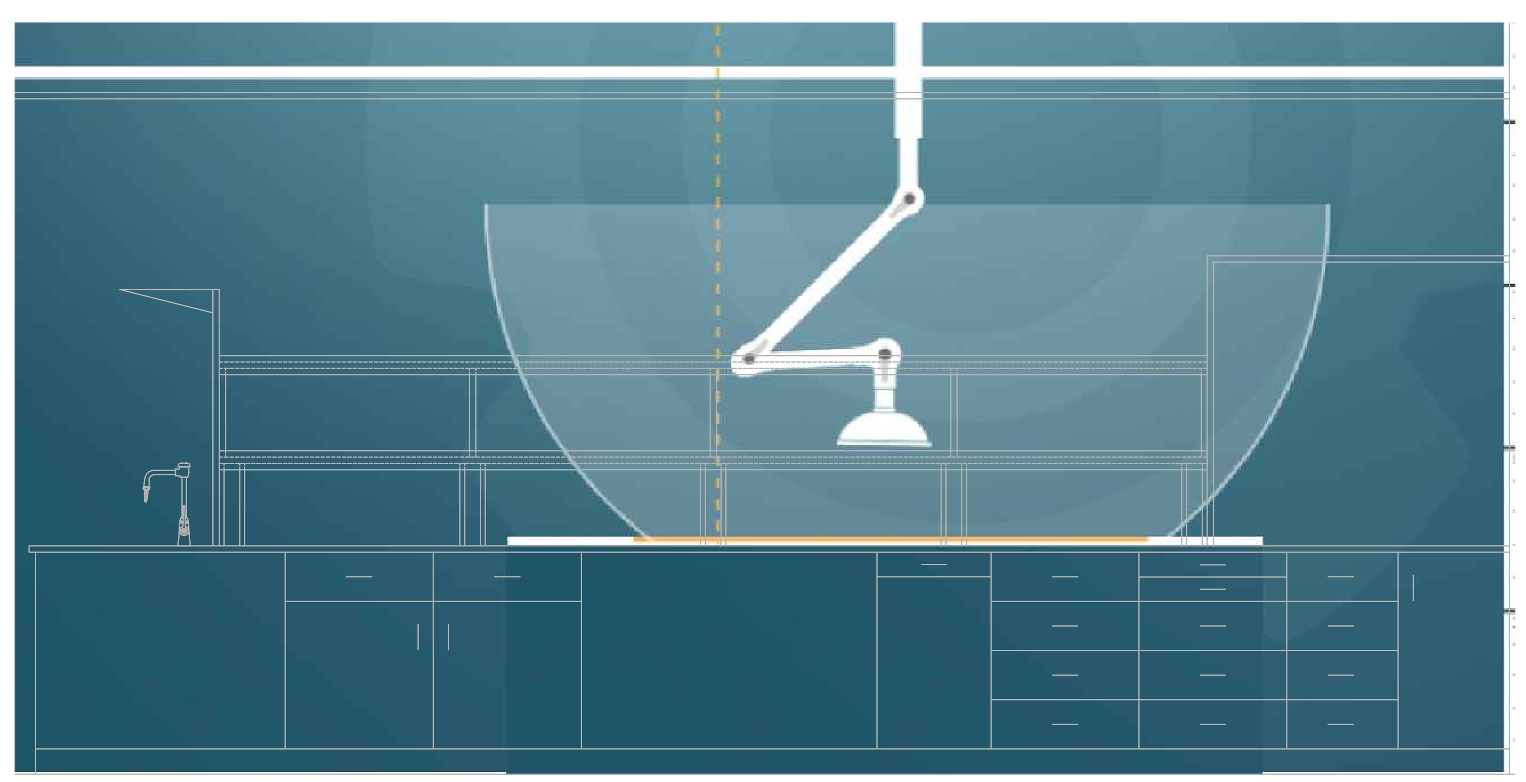

6 M601 LOCAL EXHUAST ARM DETAIL
SCALE: NONE

STATE OF MISSOURI
JAMES L. WYRICK
NUMBER PE-2018021277
PROFESSIONAL ENGINEER

ENGINEER -
JAMES LEE WYRICK
MO# - 2018021277

James Wyrick
Digitally signed by James Wyrick
Date: 2021.09.07 15:56:56 -05'00'

The Professional Engineers seal and signature affixed to this sheet applies only to the material and information shown on this sheet. All drawings, instruments, or other documents not exhibiting this seal shall not be considered prepared by this engineer, and this engineer expressly disclaims any and all responsibility for such plans, drawings, or documents not exhibiting this seal.

This Document is intended to be signed digitally. If no digital signature is attached to this file, this media should not be considered a certified document.

09/13/21	ISSUED FOR CONSTRUCTION	

DRAWN BY: JLW CHECKED BY: JLW

CAMPUS FACILITIES
Planning, Design, & Construction
Design Services
UNIVERSITY OF MISSOURI

SCHWEITZER HALL
COLUMBIA, BOONE COUNTY, MISSOURI 65211
RENOVATE LAB 213

MECH & PLUMBING DETAILS & SCHEDULES

PROJECT NUMBER
CP211261

SHEET
MP601