ABBREVIATIONS

ADJ	ADJACENT
ADAAG	AMERICANS WITH DISABILITIES ACT ACCESSIBILITY GUIDELINES
ADDT'L	ADDITIONAL
AFF	ABOVE FINISH FLOOR
AHU	AIR HANDLING UNIT
AP	ACCESS PANEL
ACM	ASBESTOS CONTAINING MATERIAL
ACT	ACOUSTIC CEILING TILE
ALT	ALTERNATE
AL	ALUMINUM
APPROX	APPROXIMATE
ARCH	ARCHITECTURAL
BO	BOTTOM OF OR BY OTHERS
BLDG	BUILDING
CJ	CONTROL JOINT
CMU	CONCRETE MASONRY UNIT
CO	CLEAN OUT
CAB	CABINET
CLR	CLEAR
CLG	CEILING
COL	COLUMN
CONC	CONCRETE
COND	CONDITION
CONST	CONSTRUCTION
CONT	CONTINUOUS/CONTINUE
CORR	CORRIDOR
CTR	CENTER
CPT	CARPET
CW	COLD WATER
CT	CERAMIC TILE
COORD	COORDINATE
CG	CORNER GUARD
D	DEPTH
DF	DRINKING FOUNTAIN
DIA	DIAMETER
DIM	DIMENSION
DIV	DIVISION
DN	DOWN
DP	DEMOUNTABLE PARTITION
DTL	DETAIL
DWG	DRAWING
EJ	EXPANSION JOINT
EP	ELECTRICAL PANEL
EA	EACH
EL	ELEVATION
ELEC	ELECTRICAL
ELEV	ELEVATOR
EHS	ENVIRONMENTAL HEALTH & SAFETY
EM	ENERGY MANAGEMENT
EMER	EMERGENCY
ENC	ENCLOSURE
EQ	EQUAL
EQUIP	EQUIPMENT
ETR	EXISTING TO REMAIN
EXSTG	EXISTING
EXT	EXTERIOR
FD	FLOOR DRAIN
FE	FIRE EXTINGISHER
FFCO	FLUSH FLOOR CLEANOUT
FFE	FURNITURE FIXTURES AND EQUIPMENT
FF	FINISHED FLOOR
FRP	FIBERGLASS REINFORCED PANEL(S)
FO	FACE OF
FP	FIRE PROTECTION
FLUOR	FLUORESCENT
FLR	FLOOR(ING)
FND	FOUNDATION
FT	FEET OR FOOT
FTG	FOOTING
FUR	FURRING
FUT	FUTURE
GB	GRAB BAR
GC	GENERAL CONTRACT(OR)
GA	GAUGE
GL	GLASS
GALV	GALVANIZED
GWB	GYPSUM WALL BOARD
HB	HOSE BIBB
H	HEIGHT
HM	HOLLOW METAL
HDW	HARDWARE
HOR	HORIZONTAL,HORIZONTALLY
HPL	HIGH PRESSURE LAMINATE
HR	HOUR
HVAC	HEATING/VENTILATING/AIR CONDITIONING
HW	HOT WATER
INCL	INCLUDE(D), (ING)
INFO	INFORMATION
INSUL	INSULATE(D),(ION)
INT	INTERIOR
JB	JUNCTION BOX
JT	JOINT
KIT	KITCHEN
L	LENGTH
LAB	LABORATORY
LAV	LAVATORY
LAM	LAMINATE
LF	LINEAR FOOTAGE
LOC	LOCATION
LT	LIGHT
LVT	LUXURY VINYL TILE
LGS	LIGHT GAUGE STEEL
MO	MASONRY OPENING
MAS	MASONRY
MAT	MATERIAL(S)
MAX	MAXIMUM
MECH	MECHANICAL
MED	MEDIUM
MEM/MMB	MEMBRANE
MEP	MECHANICAL, ELECTRICAL, & PLUMBING
MFR	MANUFACTURE(R)
MIN	MINIMUM
MIR	MIRROR
MISC	MISCELLANEOUS
MR	MOISTURE RESISTANT
MTD	MOUNTED
MTL	METAL
MULL	MULLION
NA	NOT APPLICABLE
NIC	NOT IN CONTACT
NR	NOISE REDUCTION
NRC	NOISE REDUCTION COEFFICIENT
NTS	NOT TO SCALE
NO./#	NUMBER
NOM	NOMINAL
OC	ON CENTER
OD	OUTSIDE DIAMETER
OH	OPPOSITE HAND
OVHD	OVERHEAD
PLAM	PLASTIC LAMINATE
PSF	POUNDS PER SQAURE FOOT
PSI	POUNDS PER SQAURE INCH
PAR	PARALLEL
PERIM	PERIMETER
PREFAB	PREFABRICATE(D)
PFN	PREFINISHED
PL	PLATE
PLAS	PLASTER
PLBG	PLUMBING
PNL	PANEL
PT	PAINT(ED)
PVMT	PAVEMENT
PWD	PLYWOOD
QTY	QUANTITY
RA	RETURN AIR
RCP	REFLECTED CEILING PLAN
RO	ROUGH OPENING
RTU	ROOF TOP UNIT
RAD	RADIUS
RECEP	RECEPTACLE
REF	REFER TO, REFERENCE
REINF	REINFORCE(D), (ING)
REQ	REQUIRE(D)
RES	RESILIENT
REV	REVISION(S), REVISE
RM	ROOM
SA	SUPPLY AIR
SC	SOLID CORE
SF	SQUARE FOOT (FEET)
SALV	SALVAGE
SD	STORM DRAIN
SY	SQUARE YARD
SAN	SANITARY
SCHED	SCHEDULE
SECT	SECTION
SHWR	SHOWER
SIM	SIMILAR
SPEC(S)	SPECIFICATION(S)
STW	STORM WATER
SNK	SINK
SS	SOLID SURFACE
SSTL	STAINLESS STEEL
STC	SOUND TRANSMISSION CLASS
STD	STANDARD
STL	STEEL
STOR	STORAGE
STRUCT	STRUCTURAL
SUSP	SUSPEND(ED)
SYM	SYMMETRICAL
SYS	SYSTEM
TD	TOWEL DISPENSER, TRENCH DRAIN
TO	TOP OF
THRESH	THRESHOLD
TPD	TOILET PAPER DISPENSER
THRU	THROUGH
TEL	TELEPHONE
THK	THICK(NESS)
TOW	TOP OF WALL
TYP	TYPICAL
TZ	TERRAZZO
UL	UNDERWRITERS' LABORATORY
U.N.O.	UNLESS NOTED OTHERWISE
UNF	UNFINISHED
UPS	UNINTERRUPTED POWER SUPPLY
VAC	VACUUM
VB	VAPOR BARRIER
VCT	VINYL COMPOSITION TILE
VIF	VERIFY IN FIELD
VERT	VERTICAL
VEST	VESTIBULE
W	WIDE(TH)
WC	WATER CLOSET
WD	WOOD
W/	WITH
W/I	WITHIN
W/O	WITHOUT
WDW	WINDOW
WP(G)	WATERPROOF(ING)
WR	WATER RESISTANT
WS	WATERSTOP
WSCT	WAINSCOT
WT	WEIGHT

SYMBOL LIST

	NORTH ARROW
3B	DEMO NOTE TAG
3A	DEMO AREA NOTE TAG
3A	RENO AREA NOTE TAG
3B	RENO NOTE TAG
434	DOOR TAG
M4B	WALL TAG
12/A541	REF PHOTO TAG
2 / A431	DETAIL CALLOUT 1=DETAIL NO. A431=SHEET NO.
1 / A431	ELEVATION 1=DETAIL NO. A431=SHEET NO.
1 / A431	DETAIL SECTION 1=DETAIL NO. A431=SHEET NO.
7'-10" DECK	CLG TAG W/ HT 7'-10"=AFF HT DECK=LOCATION
℄	CENTER LINE

MATERIAL LEGEND

- FACE BRICK (PLAN/SECTION)
- CAST STONE (ELEVATION)
- RIGID INSULATION
- SPRAY INSULATION
- CONCRETE MASONRY
- ASPHALT SHINGLES
- CONCRETE
- UNDISTURBED EARTH
- DISTURBED EARTH
- STEEL
- GYPSUM BOARD
- DRAINAGE FILL
- PLYWOOD
- BLANKET OR LOOSE FILL INSULATION
- DEMOLITION
- NEW PARTITION

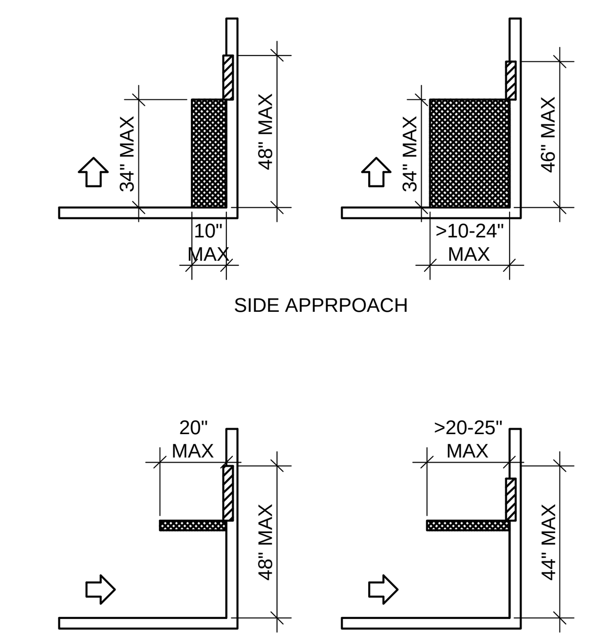

REACH RANGES
SCALE 1/4" = 1'-0"

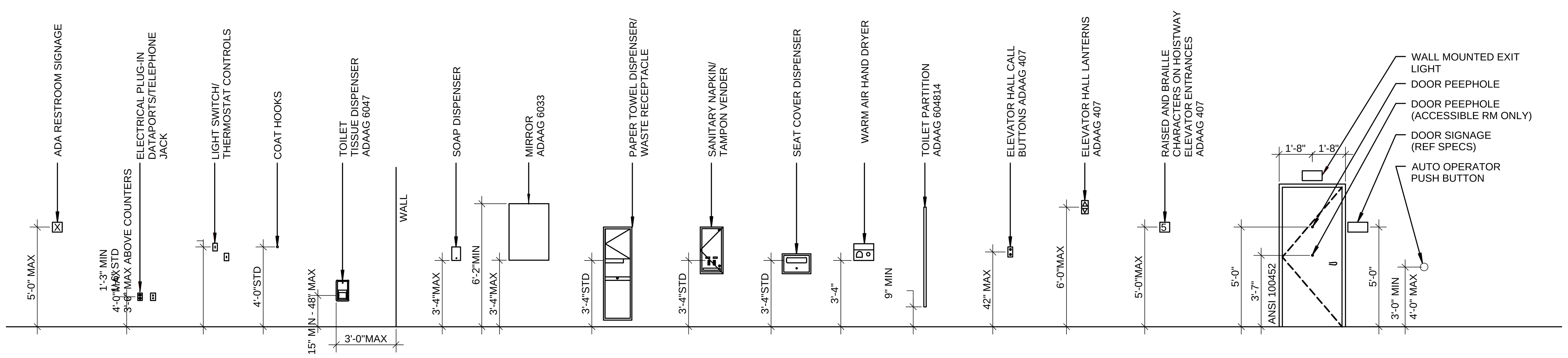

TYPICAL MOUNTING HEIGHTS
SCALE 1/4" = 1'-0"

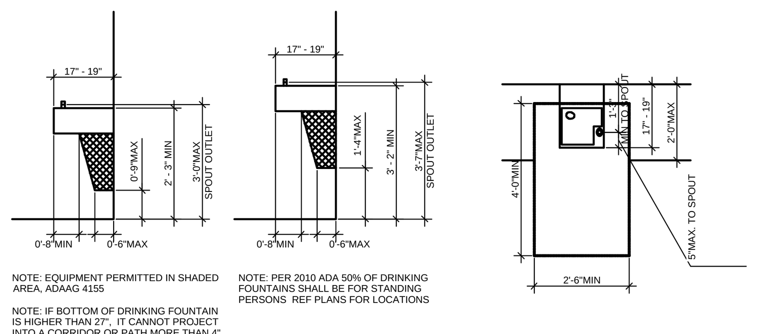

DRINKING FOUNTAINS
SCALE 1/4" = 1'-0"

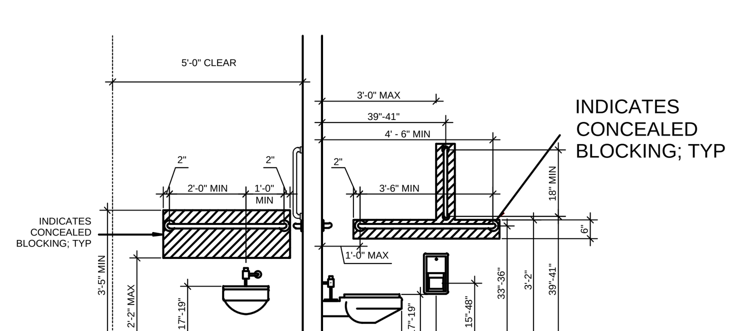

GRAB BAR LOCATIONS
SCALE 1/4" = 1'-0"

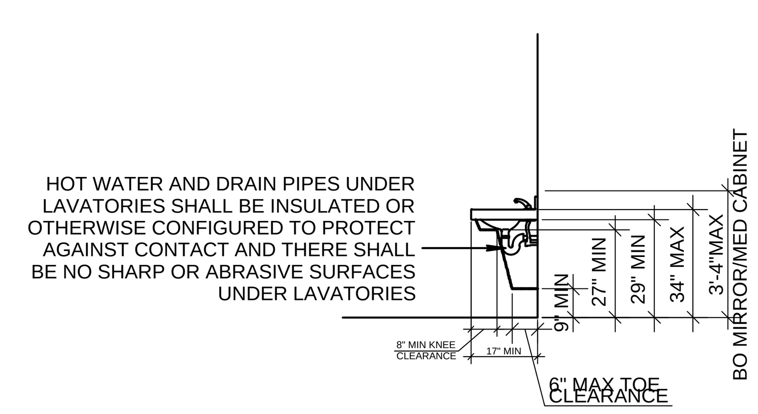

LAV CLEARANCE
SCALE 1/4" = 1'-0"

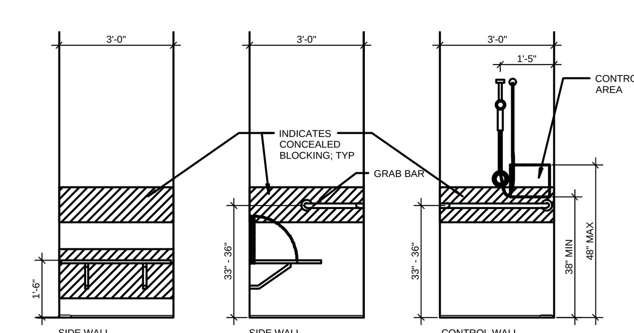

ROLL-IN TYPE SHOWER
SCALE 1/4" = 1'-0"

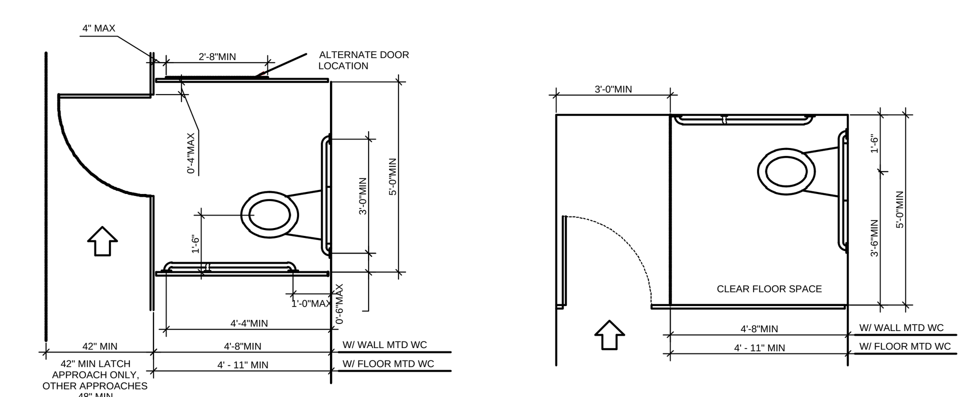

WHEELCHAIR ACCESSIBLE TOILET COMPARTMENTS
SCALE 1/4" = 1'-0"

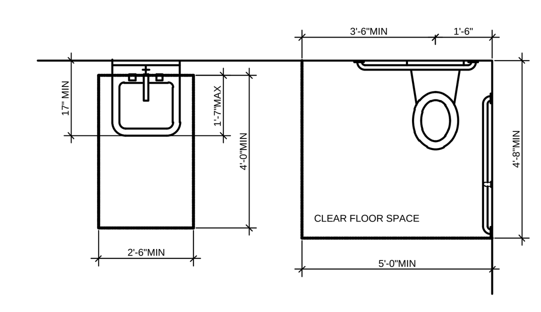

LAV AND WC
SCALE 1/4" = 1'-0"

STATE OF MISSOURI
Emily M. Johnson
A-2020011136
ARCHITECT

ARCHITECT -
EMILY M. JOHNSON
MO# A-2020011136

Emily M. Johnson
Digitally signed by Emily M. Johnson
Date: 2021.09.07 22:09:05 -05'00'

The Professional Architects seal and signature affixed to this sheet applies only to the material and information shown on this sheet. All drawings, instruments, or other documents not exhibiting this seal shall not be considered prepared by this architect, and this architect expressly disclaims any and all responsibility for such plans, drawings, or documents not exhibiting this seal.

This Document is intended to be signed digitally. If no digital signature is attached to this file, this media should not be considered a certified document.

09/13/21	ISSUED FOR CONSTRUCTION

DRAWN BY:
CHECKED BY:

CAMPUS FACILITIES
Planning, Design, & Construction
Design Services
UNIVERSITY OF MISSOURI

SCHWEITZER HALL
COLUMBIA, BOONE COUNTY, MISSOURI 65211
RENOVATE LAB 213
ABBREVIATIONS, SYMBOLS, & ADAAG

PROJECT NUMBER
CP211261

SHEET
G002